bürkert
FLUID CONTROL SYSTEMS

OEM radar measuring device, for aggressive media level measurement

- For level measurement up to 20 m, 4... 20 mA/Hart - 2 wires
- Adjustable via Display, key operation or PC-Tool with DTM
- ATEX approvals ⟨Ex⟩
- Insensitive to variations of temperature, pressure, medium data of the product and gas layers

Type 8136 can be combined with...

Type 8793
Process controller

Type 2103
Diaphragm valve

Type 8802-GD
Element
control valve system

Type 8644
Valve islands

PLC

The Type 8136 is a non-contact radar level measuring device for continuous level measurement.

The unit is available in two versions:
- with encapsulated horn antenna particularly suitable for level measurement of aggressive liquids in small vessels.

- with plastic horn antenna particularly suitable for measurement in open flumes or gauge measurement in waters.

Accuracy diagram

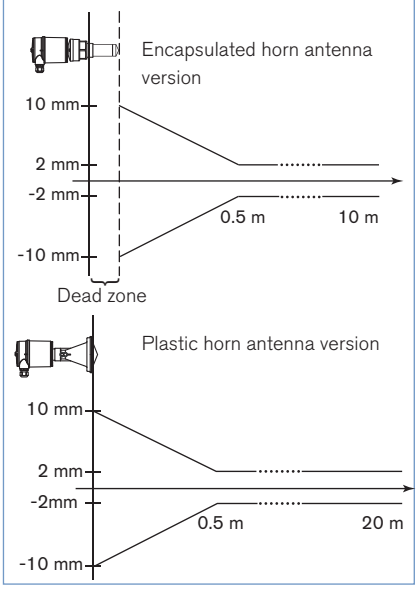

General data	
Materials	
Housing / Cover	PBT, Stainless steel 316L (1.4404) / PC
Seal ring / Ground terminal	NBR / Stainless steel 316Ti/316L (1.4571/1.4435)
Mounting strap / Fixing screws	Stainless steel 304 (1.4301) / Stainless steel 316L (1.4435)
Wetted parts	
Encapsulated horn antenna version	
Process connection / Antenna / Seal	PVDF / PVDF (completely encapsulated) / FKM
Plastic horn antenna version	
Process connection	Stainless steel 316L (1.4435)
Horn antenna / Focus lens	PBT-GF30 / PP
Display*	LCD in full dot matrix (option)
Process connection	Thread G 1½" or NPT 1½" (Encapsulated horn antenna version) Mounting strap 170 mm (Plastic horn antenna version)
Max. torque mounting boss	4 Nm (mounting screws - strap on the sensor housing)
Electrical connection	Cable glands M20 x 1.5
Measuring value	Distance between process connection and product surface
Min. dielectric figure	εr > 1.6
Dead zone	50 mm[1)]
Measuring range	0.05 to 10 m (Encapsulated horn antenna version) 0 to 20 m (Plastic horn antenna version)
Process temperature	-40 to +80°C *(-40 to 176°F)*
Vessel pressure	-1 to 3 bar *(-14.51 to 43.53 PSI)* (-100 to 300 kPa)
Vibration resistance	Mechanical vibrations with 4 g and 5... 100 Hz
Temperature coefficient	0.03%/10K (Average temperature coefficient of the zero signal - temperature error)
Resolution	max. 1 mm
Frequency	K-band (26 GHZ technology)
Interval	approx. 1 s
Beam angle at 3 dB	22° (Encapsulated horn antenna vers.) - 10° (Plastic horn antenna vers.)
Adjustment time	> 1 s (dependent on the parameter adjustment)
Accuracy	± 2 mm (see diagram)

* to be ordered separately

[1)] Encapsulated horn antenna version. In products with low dielectric value up to 50 cm.

DTS 1000105436 EN Version: H Status: RL (released | freigegeben | validé) printed: 19.01.2015

DTS 1000105436 EN Version: H Status: RL (released | freigegeben | validé) printed: 19.01.2015

Electrical data	
Operating voltage	14 - 36 V DC or 14 - 30 V DC (Ex ia instrument)
Permissible residual ripple	< 100 Hz: Uss < 1 V 100 Hz... 10 kHz: Uss < 10 mV
Output signal	4... 20 mA/HART
Resolution	1.6 µA
Fault signal	current output unchanged 20.5 mA, 22 mA or < 3.6 mA (selectable)
Current limitation	22 mA
Load	see load diagram
Damping (63% of the input variable)	0... 999 s, adjustable

Environment	
Ambient temperature	-40 to +80°C *(-40 to 176°F)* (operation and storage)
Relative humidity	80% max; without condensation

Standards and approvals	
Protection	IP66/IP67 with M20 x 1.5 gland mounted and tightened
Overvoltage category	III
Protection class	II
Standard	
EMC	EN61326
Security	EN61010-1
NAMUR	NE 21; NE 43
Approvals	ATEX[2)] : EN60079-0; EN60079-11; EN60079-26

Specifications Ex	
Ⓔx - Protection	Categories 1/2G or 2G
Ⓔx - Certification	Ex ia IIC T6
Conformity specifications[2)]	
Operating voltage Ui	30 V
Short circuit rating Ii	131 mA
Power limitation Pi	983 mW
Ambient temperature	-40 to +55°C *(-40 to 131°F)* (dependent on categories)
Internal capacity Ci	negligible
Internal inductivity Li	negligible

2) homologation certificate PTB 08 ATEX 2002X

Load diagram

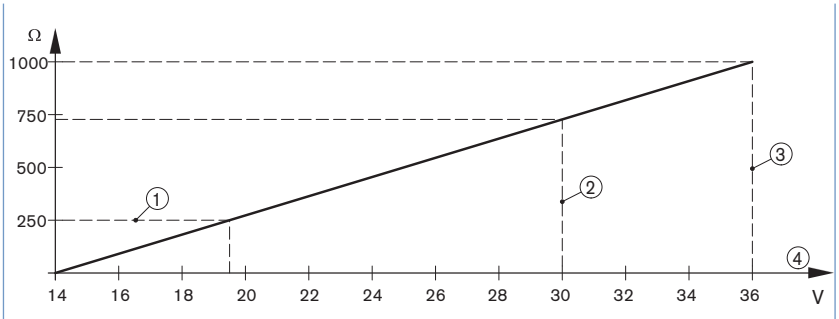

1 HART load
2 Voltage limit Ex ia instrument
3 Voltage limit non-Ex instrument
4 Operating voltage

Target applications

Dosing and processing systems

Level measurement:
The radar measuring principle is particularly suitable for continuous level measurement of toxic and corrosive substances. The measurement is non-contacting, i.e. there is no direct contact with the medium.
Due to the very small process connection and the PVDF encapsulated antenna, the 8136 radar level measuring device is ideal for this application.

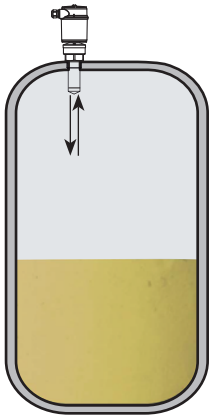

Open flumes

Measurement for heavy demands:

Radar level measuring device like the Type 8136 are also suitable for measurement in open flumes. For wastewater treatment in chemical plants, where wastewater temperatures change drastically or where solvents are contained in the wastewater, the use of radar level measuring device is recommended.

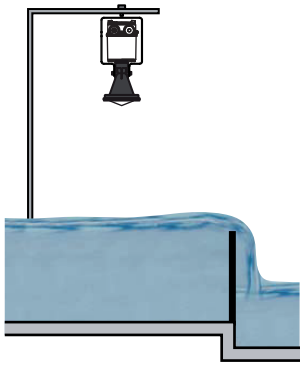

Principle of operation

The radar measuring device consists of an electronic housing, a process connection element the antenna and a sensor. The antenna emits short radar pulses with a duration of approximate 1 ns to the medium. These pulses are reflected by the medium surface and received by the antenna as echoes. Radar waves travel at the speed of light. The running time of the radar pulses from emission to reception is proportional to the distance and hence to the level. The determined level is converted into an output signal and transmitted as a measured value.

The measuring device can be adjusted with:

- the display/configuration module
- the suitable Bürkert DTM in conjunction with adjustment software according to the FDT/DTM standard, e.g. PACTware™ and PC
- a HART handheld

The entered parameters are generally saved in the measuring device Type 8136. Optionally, parameters may also be uploaded and downloaded with the display/configuration module or save in a file by using PACTware™/DTM

Set up with display/configuration module

The display/configuration module can be inserted into the measuring device and removed again at any time. It is not necessary to interrupt the power supply. The measuring device is adjusted via the four keys of the display/configuration module

Display/configuration module

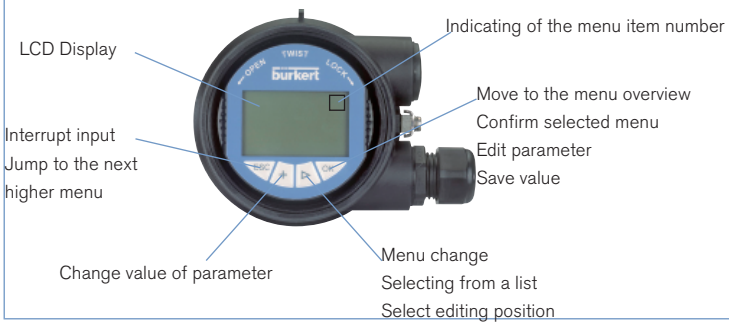

Set up with PACTware™/DTM and HART communication

The measuring device can be operated thanks to PACTware™, via HART communication. An interface adapter is necessary for the adjustment with PACTware™. For the setup of the Type 8136, the DTM in the actual version must be used. The basic version of DTM incl. PACTware™ is available as a free-of-charge download from the Internet at www.burkert.com.

Connecting the PC via HART

1. Measuring device 8136
2. HART-USB Modem
3. Resistance 250 Ohms

Necessary components:

- Measuring device 8136
- PC with PACTware™ and suitable Bürkert DTM
- HART-USB Modem
- Resistance approx. 250 Ohms
- Power supply unit

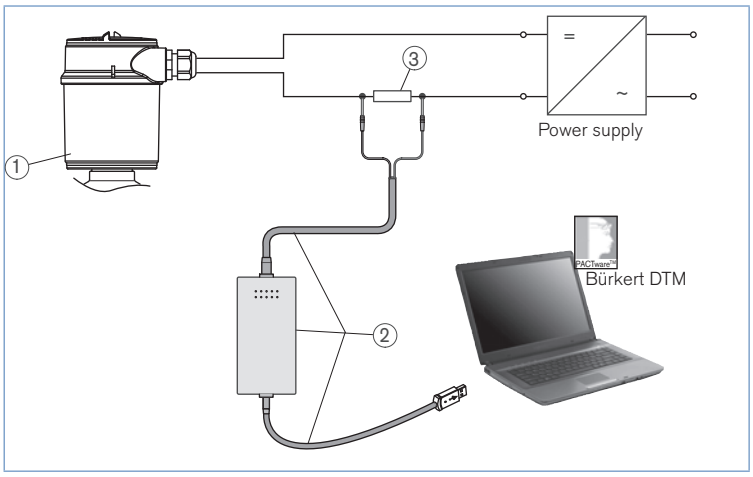

DTS 1000105436 EN Version: H Status: RL (released | freigegeben | validé) printed: 19.01.2015

Dimensions [mm]

Encapsulated horn antenna version

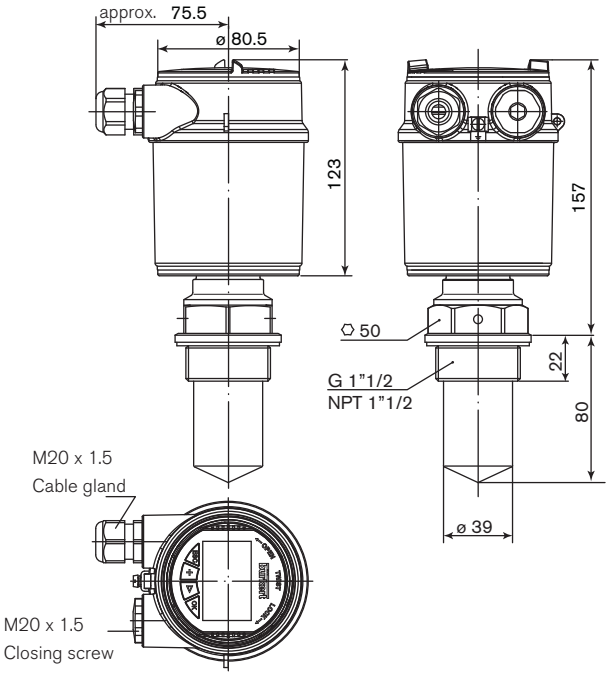

Plastic horn antenna version

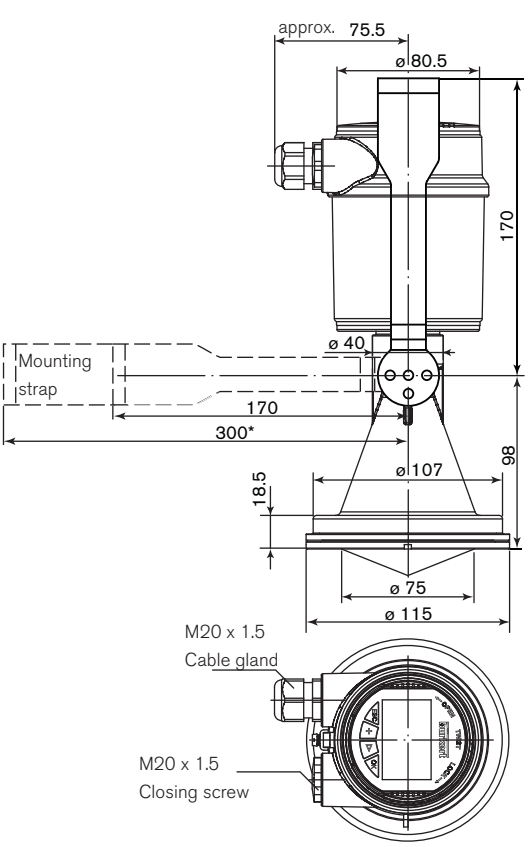

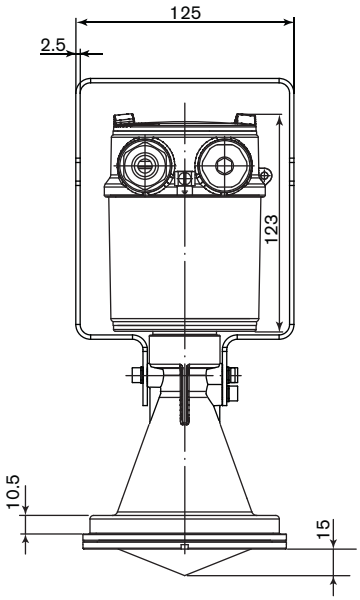

Adapter flange* for plastic horn antenna ø 80 mm version

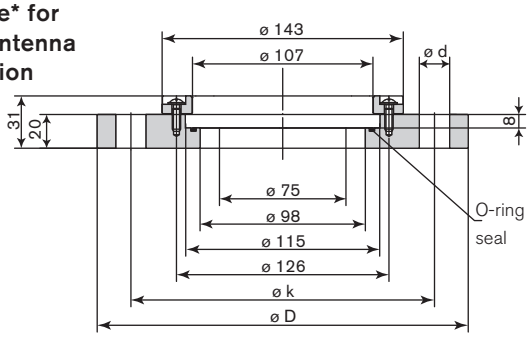

Flange	ø D	ø k	ø d	Number of hole
DN100 PN16	220	180	18	8 x 45° (=360°)
ASME (ANSI B16.5) 4" 150 psi	228.6	190.5	19.1	8 x 45° (=360°)

* 300 mm strap, adapter flange has to be ordered separately

DTS 1000105436 EN Version: H Status: RL (released | freigegeben | validé) printed: 19.01.2015

Ordering chart for compact measuring device Type 8136

Specifications	Operating voltage	Output	Antenna version	Process connection	Electrical connection	Item no. without display/ configuration module
Standard version	14 - 36 V DC	4... 20 mA/HART (2 wires)	Encapsulated horn - 40 mm	G1½"	Cable gland M20 x 1.5	560 146
				NPT1½"	Cable gland M20 x 1.5	560 148
			Plastic horn - 80 mm	Mounting strap	Cable gland M20 x 1.5	560 150
Ex version - ATEX approval	14 - 30 V DC	4... 20 mA/HART (2 wires)	Encapsulated horn - 40 mm	G1½"	Cable gland M20 x 1.5	560 147
				NPT1½"	Cable gland M20 x 1.5	560 149
			Plastic horn - 80 mm	Mounting strap	Cable gland M20 x 1.5	560 151

Further versions on request

Process connection
Clamp 2", 3"
bolting DN50, DN80 PN3, DIN11851 / 316L
without compression flange,
with compression flange DN80 PN16, ANSI3", JIS DN80 10K / PPH
adapter flange DN150 PN16 FKM / PPH
ANSI4" 150PSI FKM / PPH
ANSI6" 150PSI FKM / PPH
JIS DN100 10K FKM / PPH
JIS DN150 10K FKM / PPH

Please also use the "request for quotation" on page 6 for ordering a customized measuring device. go to page

Ordering chart - accessories for measuring device Type 8136 (has to be ordered separately)

Specifications	Item no.
Set with 2 reductions M20 x 1.5/NPT½" + 2 neoprene flat seals for cable gland + 2 screw-plugs M20 x 1.5	551 782
Hart-USB Modem	560 177
Set with a display/configuration module, a transparent cover and a seal ring	559 279
Set with a transparent cover and a seal ring	561 006
Mounting strap 300 mm	559 839
Adapter flange DN100 PN16 FKM / PPH	560 437
Adapter flange ASME (ANSI B16.5) 4" 150PSI FKM / PPH	560 436

DTS 1000105436 EN Version: H Status: RL (released | freigegeben | validé) printed: 19.01.2015

Customized measuring device Type 8136 - request for quotation

Please fill in and send to your local Bürkert Sales Centre* with your inquiry or order.

Note
You can fill out the fields directly in the PDF file before printing out the form.

Company:	Contact person:
Customer No.:	Department:
Address:	Tel. / Fax.:
Postcode / Town:	E-mail:

Radar level measuring device 8136

Quantity: ☐ **Desired delivery date:** ☐

Antenna	☐ Encapsulated horn in PVDF	☐ Plastic horn in PP	
Process connection:			
Compression flange	☐ with	☐ without	
External thread	☐ G 1½"	☐ NPT1½"	
Clamp	☐ 2" PN3	☐ 3" PN3	
Bolting	☐ DN50 PN3	☐ DN80 PN3	
Mounting strap	☐ 170 mm	☐ 300 mm	
Adapter flange	☐ DN100 PN16	☐ ANSI 4"	☐ JIS DN100 10K
	☐ DN150 PN16	☐ ANSI 6"	☐ JIS DN150 10K
Display/configuration module	☐ Yes	☐ No	
ATEX approval	☐ Yes	☐ No	

reset form

Interconnection possibilities with other Bürkert devices

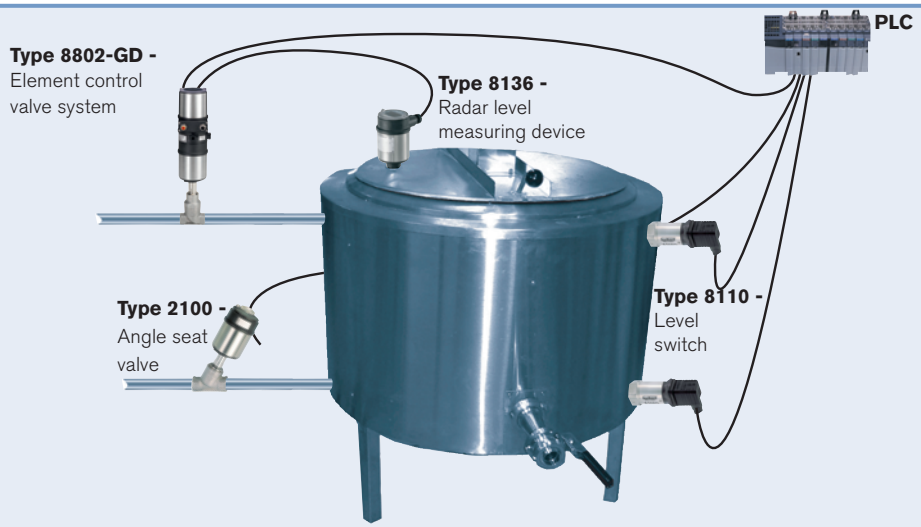

*To find your nearest Bürkert office, click on the orange box → www.burkert.com

In case of special application conditions, please consult for advice.

Subject to alteration.
© Christian Bürkert GmbH & Co. KG

1411/8_EU-en_00895041

DTS 1000105436 EN Version: H Status: RL (released | freigegeben | validé) printed: 19.01.2015